ADDENDUM

Peoria Park District
Planning, Design and Construction Department
1314 N. Park Road
Peoria, IL 61604
Telephone: (309) 686-3386

ADDENDUM NO. One

PROJECT TITLE: Pool Demolition

ISSUANCE DATE: 12/20/24

LOCATION: Lakeview Family Aquatic Center

The proposed Contract Documents for this Work are modified as follows:

I. **GENERAL INFORMATION:**
Owner will disconnect all electrical and gas to site, prior to Contractor demolition.

Any grading required for access to site will be the responsibility of the Contractor and shall be coordinated with Owner.

II. **DRAWINGS**:
Historical plans of the site are attached for reference only. Contractor field verification is required.

III. **PROJECT MANUAL/SPECIFICATIONS**.:
Supplementary Instructions to Bidders, Section 4. Codes and Permits, add:
"C. Contractor responsible for submitting, and all costs associated with filing, a notice of demolition to the Illinois Environmental Protection Agency (ILEPA) and the Illinois Department of Public Health (ILDPH), as applicable."

IV. **INVITATION TO BID**:
N/A

END OF ADDENDUM NO. 1

(Addendum may be bound into Project Manual, attached to front cover, faxed, mailed, emailed or delivered to bidders.)

FILE: PMD-C3 7/11/93

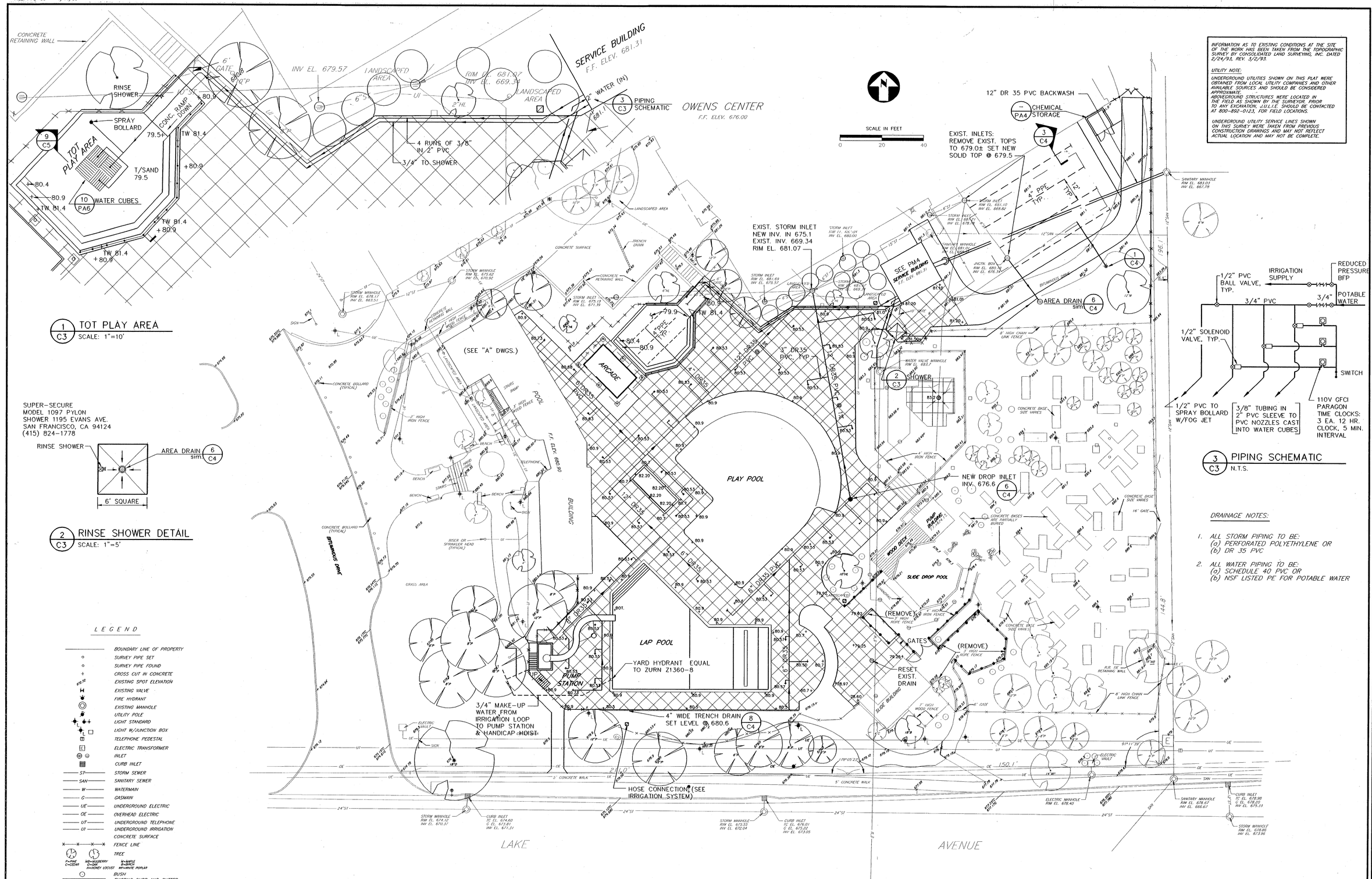

1 C3 TOT PLAY AREA
SCALE: 1"=10'

2 C3 RINSE SHOWER DETAIL
SCALE: 1"=5'

3 C3 PIPING SCHEMATIC
N.T.S.

INFORMATION AS TO EXISTING CONDITIONS AT THE SITE OF THE WORK HAS BEEN TAKEN FROM THE TOPOGRAPHIC SURVEY BY CONSOLIDATED LAND SURVEYING, INC. DATED 2/24/93, REV. 3/2/93.

UTILITY NOTE:

UNDERGROUND UTILITIES SHOWN ON THIS PLAT WERE OBTAINED FROM LOCAL UTILITY COMPANIES AND OTHER AVAILABLE SOURCES AND SHOULD BE CONSIDERED APPROXIMATE.
ABOVEGROUND STRUCTURES WERE LOCATED IN THE FIELD AS SHOWN BY THE SURVEYOR. PRIOR TO ANY EXCAVATION, J.U.L.I.E. SHOULD BE CONTACTED AT 800-892-0123, FOR FIELD LOCATIONS.

UNDERGROUND UTILITY SERVICE LINES SHOWN ON THIS SURVEY WERE TAKEN FROM PREVIOUS CONSTRUCTION DRAWINGS AND MAY NOT REFLECT ACTUAL LOCATION AND MAY NOT BE COMPLETE.

DRAINAGE NOTES:

1. ALL STORM PIPING TO BE:
   (a) PERFORATED POLYETHYLENE OR
   (b) DR 35 PVC
2. ALL WATER PIPING TO BE:
   (a) SCHEDULE 40 PVC OR
   (b) NSF LISTED PE FOR POTABLE WATER

REVISIONS

NO.	DATE

DATE 6/30/93

Markey and Associates, Inc.
Engineering Planning
4253 Edgewater Court, N.W.
Kennesaw, Georgia 30144
(404) 424-1308

LAKEVIEW POOL RENOVATION

GRADING, DRAINAGE AND UTILITIES PLAN

PEORIA PARK DISTRICT

DRAWN BY: RJJ
CHECKED BY: DNM
PROJECT NO.

SHEET C3

NOT RELEASED FOR CONSTRUCTION

FILE: PPD-C5 7/11/93

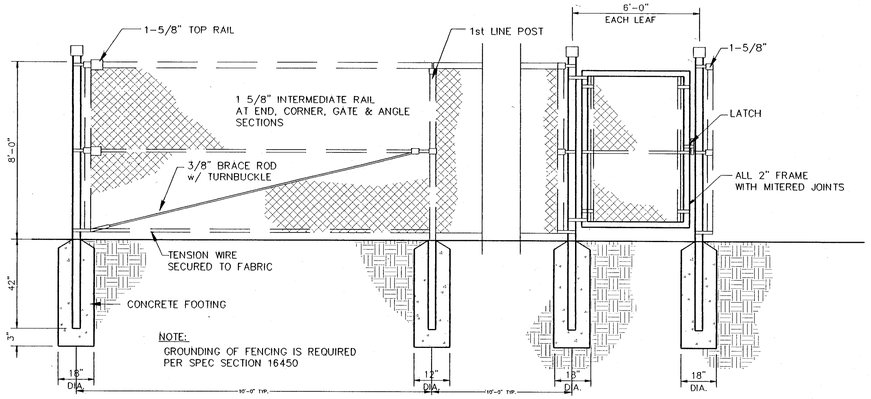

8 / C54 CHAIN LINK FENCE DETAIL
N.T.S.

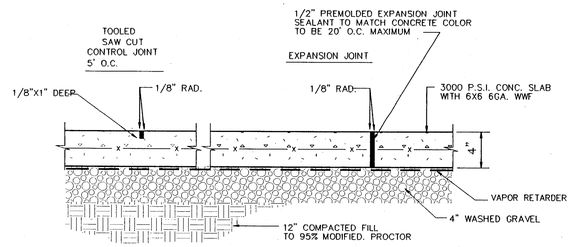

2 / C5 CONC. DECK DETAIL
N.T.S.

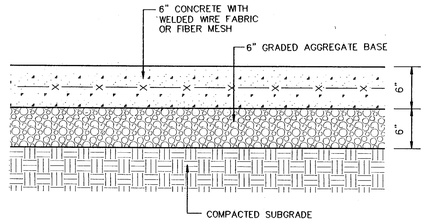

2A / C5 HEAVY-DUTY CONCRETE PAVING DETAIL
N.T.S.

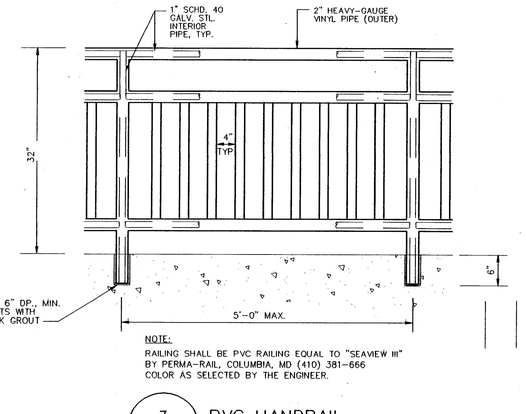

3 / C5 PVC HANDRAIL
N.T.S.

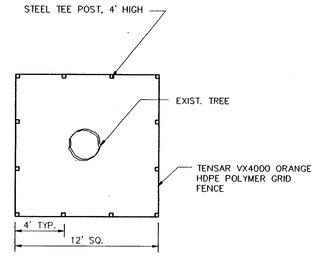

4 / C5 TREE PROTECTION FENCE DETAIL
SCALE: NTS

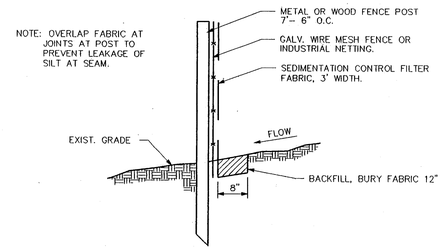

5 / C5 SILT FENCE DETAIL
N.T.S.

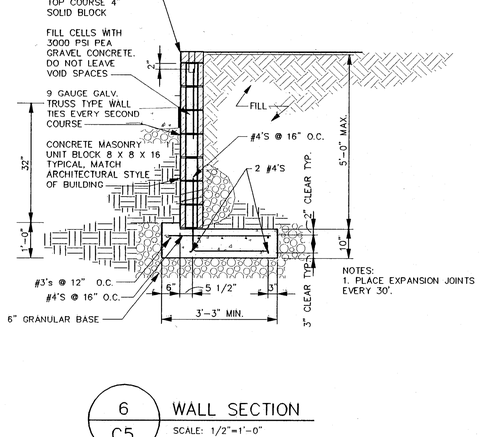

6 / C5 WALL SECTION
SCALE: 1/2"=1'-0"

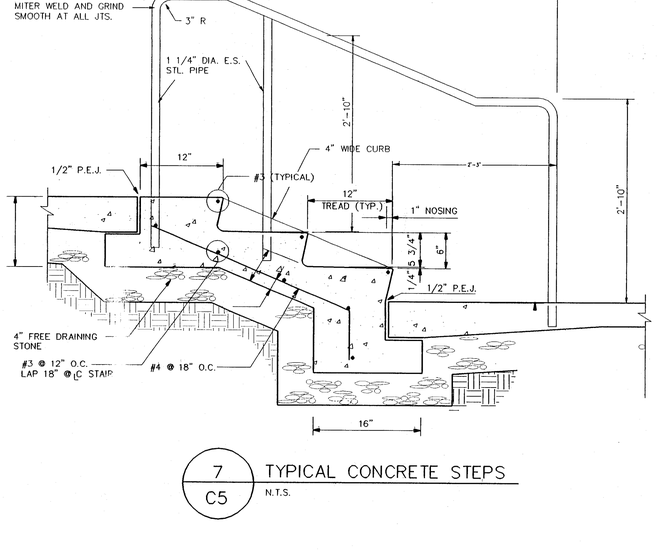

7 / C5 TYPICAL CONCRETE STEPS
N.T.S.

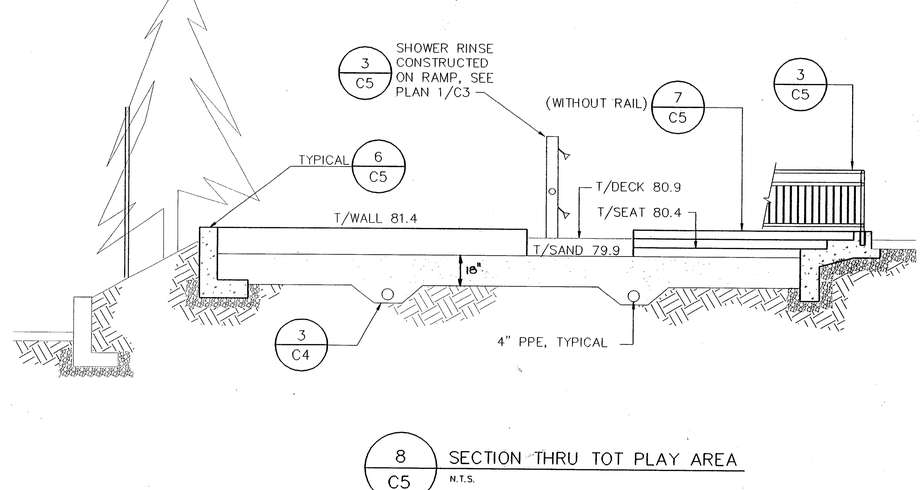

8 / C5 SECTION THRU TOT PLAY AREA
N.T.S.

REVISIONS

NO.	DATE

DATE 5/21/93

Markey and Associates, Inc.
Engineering Planning
4253 Edgewater Court, N.W.
Kennesaw, Georgia 30144
(404) 424-1306

LAKEVIEW POOL RENOVATION

DETAILS

PEORIA PARK DISTRICT

DRAWN BY: RJJ
CHECKED BY: DNM
PROJECT NO.

SHEET C5

NOT RELEASED FOR CONSTRUCTION

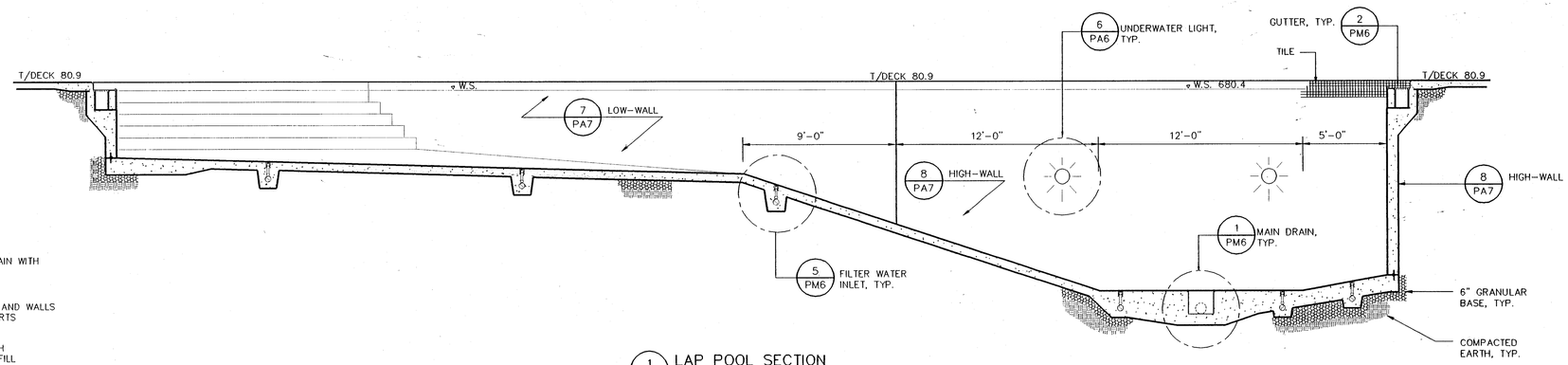

1 PA3 LAP POOL SECTION
SCALE: 1/4"=1'-0"

NOTES:

1. ALL SLABS AND FOUNDATIONS SHALL BE SET ON COMPACTED SUBGRADE, OVERLAIN WITH 6" OF GRANULAR BASE AND 20 MIL SLIP SHEET.
2. CONSTRUCTION OVER THE OLD POOL SLAB AND WALLS SHALL BE COORDINATED FOR PROPER INVERTS AND CLEARANCES. PLACE AT LEAST 6" OF GRANULAR OVER AND AROUND THE OLD STRUCTURES, COMPACT, AND OVERLAY WITH 3.5 OZ. NON-WOVEN FILTER FABRIC. BACKFILL THE REST OF THE DEPTH TO SUBGRADE WITH SELECT FILL MATERIAL.

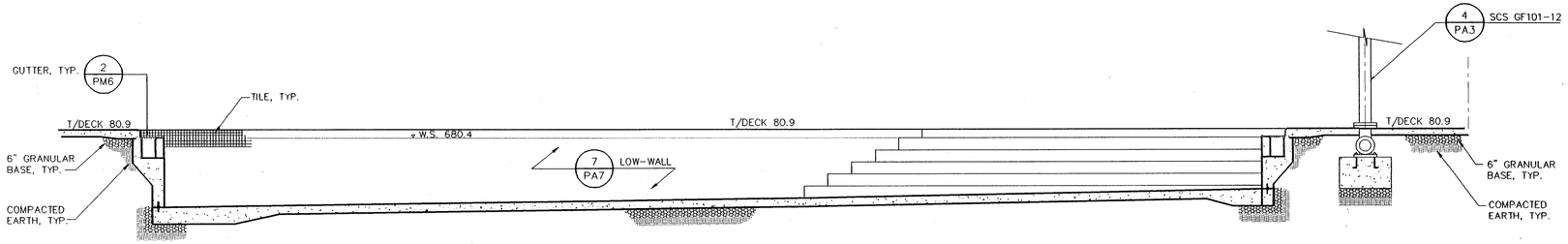

2 PA3 LAP POOL SECTION
SCALE: 1/4"=1'-0"

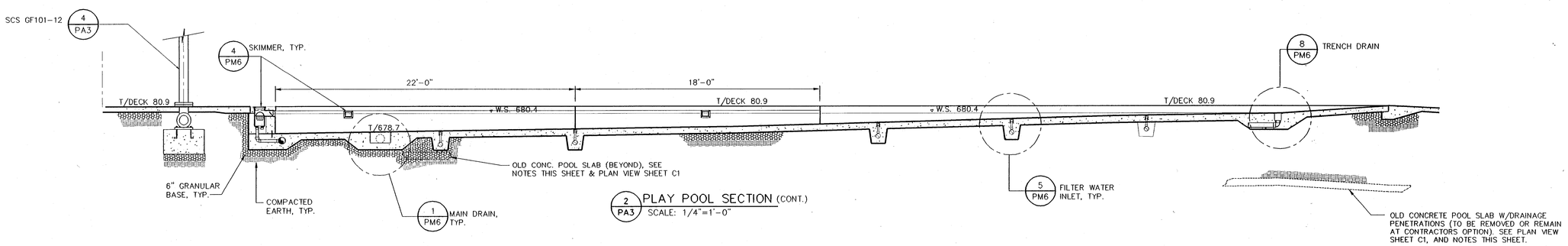

2 PA3 PLAY POOL SECTION (CONT.)
SCALE: 1/4"=1'-0"

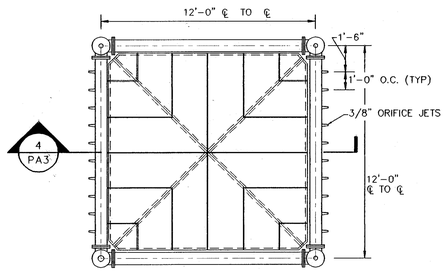

3 PA3 SCS GF101-12 PLAN
SCALE: 1/4"=1'-0"

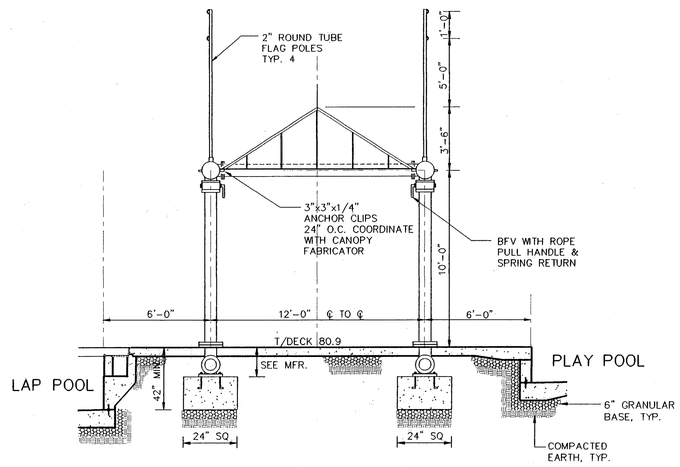

4 PA3 SCS GF101-12 SECTION
SCALE: 1/4"=1'-0"

NOTES:

1. GAZEBO FOUNTAIN STRUCTURE SHALL BE THE COMPLETE SYSTEM, EXCLUDING AWNING TYPE CANOPY ROOF, AS MANUFACTURED BY SCS, MODEL GF101-12.
2. AWNING TYPE CANOPY SHALL BE FABRICATED BY A MANUFACTURER AND INSTALLER OF TENTS AND AWNINGS WITH 5-YEARS EXPERIENCE MIN. FRAME WORK SHALL BE CONSTRUCTED OF 1-1/2" SQ. ALUMINUM TUBING. FABRIC SHALL BE SUNBRELLA #1601 OR EQUAL. COORDINATE ANCHORING SYSTEM WITH SCS.

REVISIONS

NO.	DATE

DATE 6/30/93

Markey and Associates, Inc.
Engineering Planning
4243 Ridgewater Court, N.W.
Kennesaw, Georgia 30144
(404) 424-1306

LAKEVIEW POOL RENOVATION

LAP AND PLAY POOLS SECTIONS AND DETAILS

PEORIA PARK DISTRICT

DRAWN BY: R.J.J.
CHECKED BY: DNM
PROJECT NO.

SHEET PA3

FILE: PPD-PA7 7/12/93

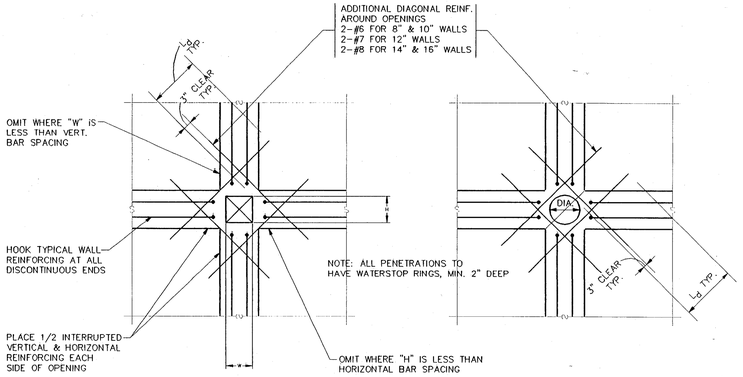

1 / PA7 TYPICAL REINFORCING AROUND WALL OPENINGS
N.T.S.

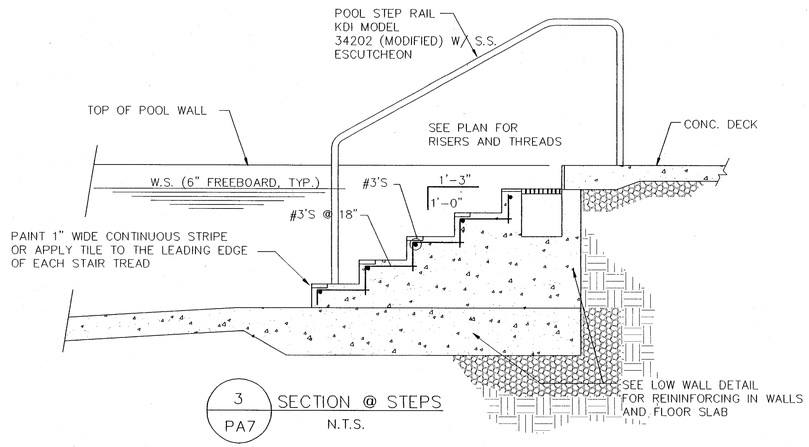

3 / PA7 SECTION @ STEPS
N.T.S.

CLASS "C" LAP SCHEDULE
FOR 4,000 P.S.I. CONCRETE

BAR SIZE	CLASS "C" LAP SPLICE LENGTH (INCHES)
3	17
4	23
5	29
6	34
7	43
8	57
9	72
10	92
11	113

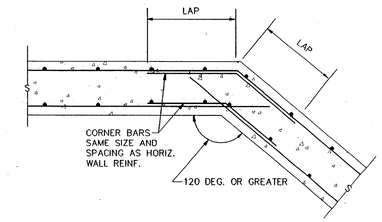

4 / PA7 TYPICAL WALL REINFORCEMENT
N.T.S.

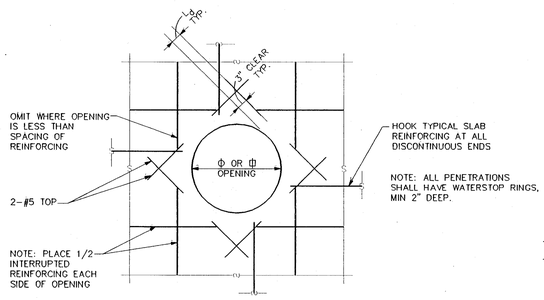

2 / PA7 OPENINGS GREATER THAN 6" IN FLOOR SLABS
N.T.S.

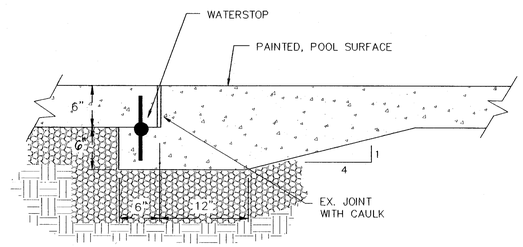

5-A / PA7 ALTERNATE EXPANSION JOINT DETAIL
SCALE: N.T.S.

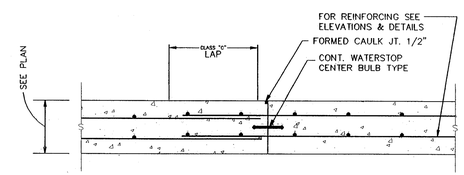

5 / PA7 TYPICAL VERTICAL CONSTRUCTION JOINTS FOR WALLS & SLABS
N.T.S.

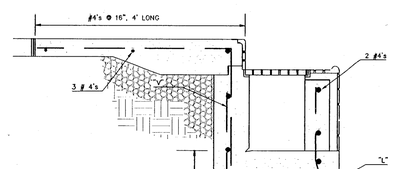

H	B	L	V1	V2
6' TO 9'	9'-0"	#4 @ 12"	#5 @ 9"	#4 @ 9"
9' TO 10'	10'-0"	#4 @ 12"	#6 @ 9"	#4 @ 9"
10' TO 11'	11'-0"	#4 @ 12"	#7 @ 9"	#5 @ 9"
11' TO 12'	12'-0"	#4 @ 12"	#7 @ 7"	#6 @ 7"

ALL LAPS SHALL BE CLASS "C"

WALL SCHEDULE

H	B	L	V
UP TO 2'	1'-0"	#4 @ 12"	#3 @ 12"
2' TO 3'	1'-6"	#4 @ 12"	#3 @ 12"
3' TO 4'	3'-0"	#4 @ 12"	#4 @ 12"
4' TO 5'	4'-6"	#4 @ 12"	#4 @ 12"
5' TO 6'	5'-6"	#4 @ 12"	#4 @ 9"

ALL LAPS SHALL BE CLASS "C"

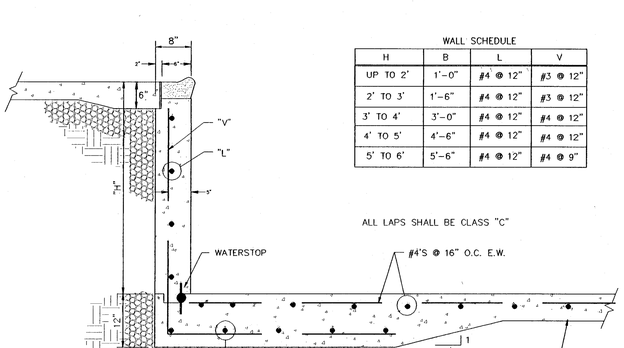

7 / PA7 TYP SECTION – LOW WALLS
SCALE: NTS

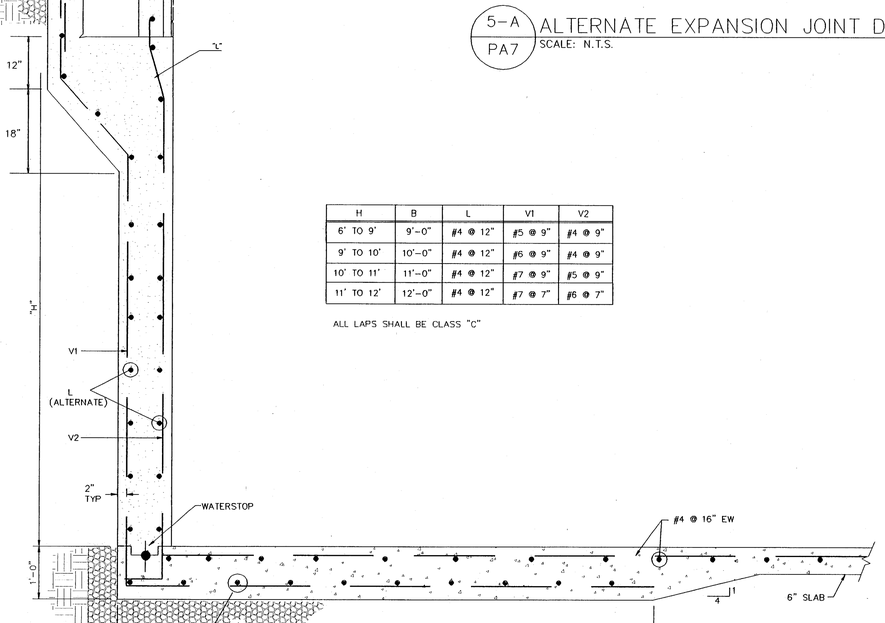

8 / PA7 TYP SECTION – HIGH WALLS
SCALE: NTS

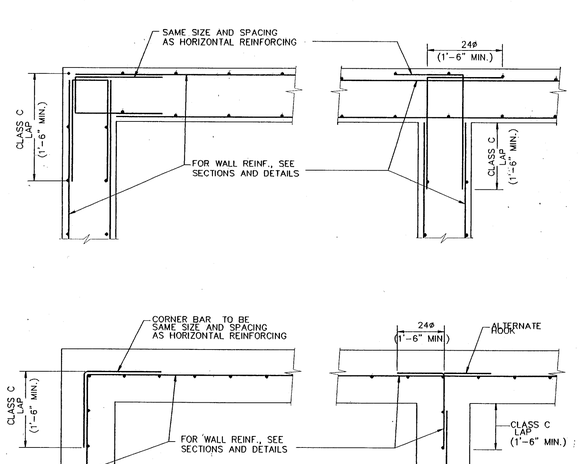

6 / PA7 TYPICAL WALL REINFORCEMENT DETAILS
N.T.S.

REVISIONS

NO.	DATE

DATE 6/30/93

Markey and Associates, Inc.
Engineering Planning
4253 Edgewater Court, N.W.
Kennesaw, Georgia 30144
(404) 424-1306

LAKEVIEW POOL RENOVATION

DETAILS

PEORIA PARK DISTRICT

DRAWN BY: R.J.J.
CHECKED BY: D.N.M.
PROJECT NO.

SHEET PA7

RELEASED FOR CONSTRUCTION

POOL DATA

PLAY POOL

PLAY POOL AREA 3,850 SF
PLAY POOL VOLUME 25,700 GALS
DESIGN TURNOVER RATE 45 MINS
FILTER FLOW RATE 577 GPM
RIDE CIRCULATION FLOW RATE 1,600 GPM

DRAIN SIZING:
TOTAL FLOW 4.86 CFS
GRATE OPENINGS 40%
ALLOWABLE VELOCITY 1.5 FPS
AREA REQ'D 12.5 SF
USE 2 MAIN DRAINS @ 4.5 SF EACH
AND TRENCH DRAINS TOTALING 20 SF

SKIMMING:
9 SKIMMERS @ 30 GPM EACH
65 LINEAR FEET OF TRENCH DRAIN

INLETS:
20 @ 30 GPM EACH

LAP POOL

LAP POOL AREA 3,100 SF
LAP POOL VOLUME 148,000 GALS
DESIGN TURNOVER RATE 4.25 HOURS
FILTER FLOW RATE 577 GPM
RIDE CIRCULATION FLOW RATE 1,000 GPM

DRAIN SIZING:
TOTAL FLOW 5 CFS
GRATE OPENINGS 40%
ALLOWABLE VELOCITY 1.0 FPS
AREA REQ'D 12.5 SF
USE 1 MAIN DRAINS @ 42 SF

SKIMMING:
240 LINEAR FEET OF CONTINUOUS GUTTER

INLETS:
20 @ 30 GPM EACH

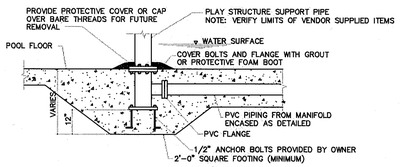

1 / PM1 FOOTING / PIPE CONNECTION DETAIL FOR SCS PLAY SYSTEM DETAIL
NOT TO SCALE

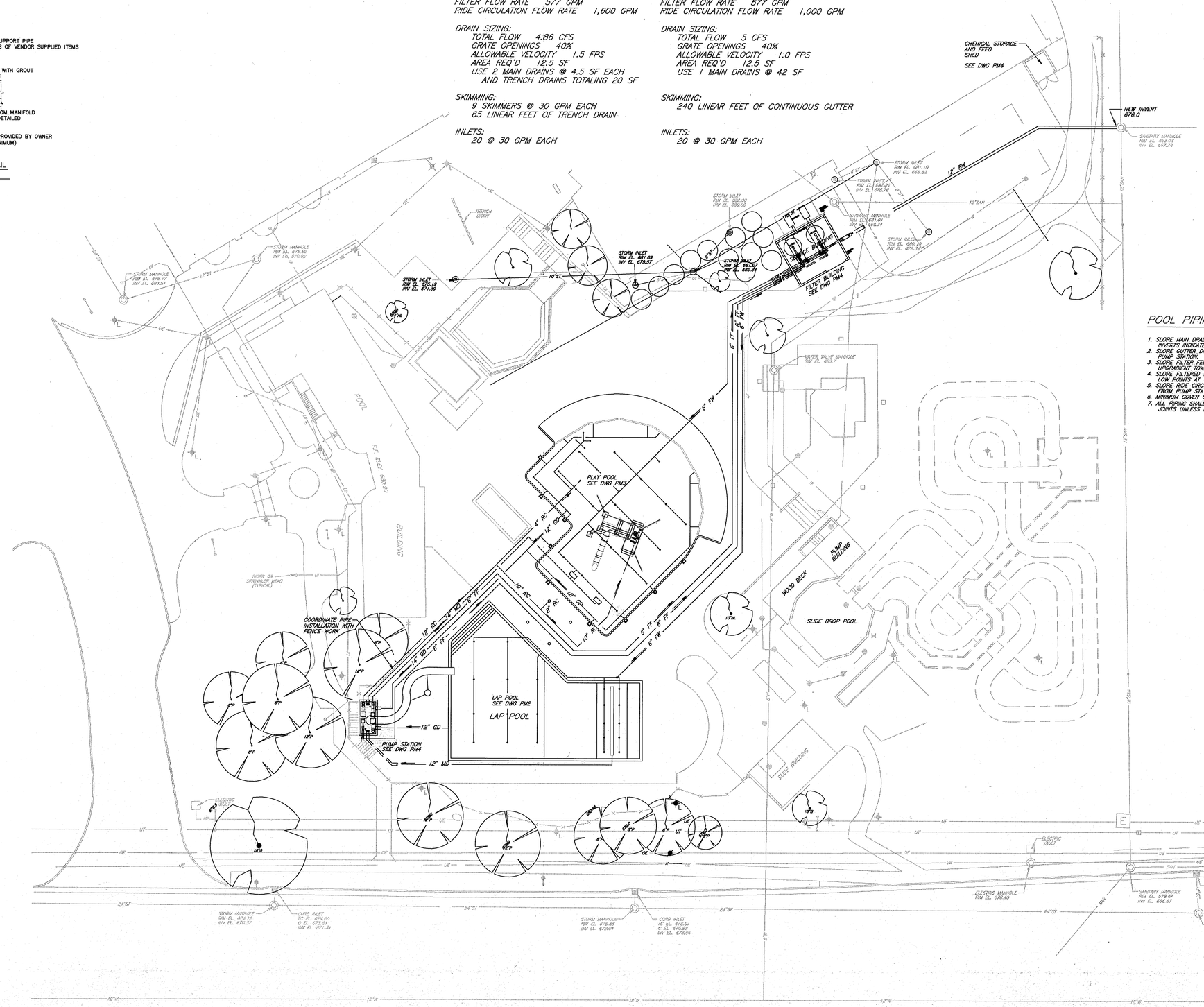

POOL PIPING NOTES

1. SLOPE MAIN DRAINS CONTINOUSLY BETWEEN INVERTS INDICATED.
2. SLOPE GUTTER DRAINS AT 1% MINIMUM TO PUMP STATION.
3. SLOPE FILTER FEED PIPING LEVEL TO SLIGHTLY UPGRADIENT TOWARD FILTERS.
4. SLOPE FILTERED WATER PIPING TOWARD DESIGNATED LOW POINTS AT 1% MINIMUM.
5. SLOPE RIDE CIRCULATION PIPING UPGRADIENT FROM PUMP STATION.
6. MINIMUM COVER ON ALL PIPING SHALL BE 24".
7. ALL PIPING SHALL BE SCH 40 PVC WITH SOLVENT WELD JOINTS UNLESS NOTED OTHERS.

INFORMATION AS TO EXISTING CONDITIONS AT THE SITE OF THE WORK HAS BEEN DRAWN FROM THE TOPOGRAPHIC SURVEY BY CONSOLIDATED LAND SURVEYING, INC. DATED 11/24/93, REV. 3/2/93.

UTILITY NOTE:

UNDERGROUND UTILITIES SHOWN ON THIS PLAT WERE OBTAINED FROM LOCAL UTILITY COMPANIES AND OTHER AVAILABLE SOURCES AND SHOULD BE CONSIDERED APPROXIMATE.
ABOVEGROUND STRUCTURES WERE LOCATED IN THE FIELD AS SHOWN BY THE SURVEYOR. PRIOR TO ANY EXCAVATION, MILLE SHOULD BE CONTACTED AT 920-892-0123, FOR FIELD LOCATIONS.

UNDERGROUND UTILITY SERVICE LINES SHOWN ON THIS SURVEY WERE DRAWN FROM PREVIOUS CONSTRUCTION DRAWINGS AND MAY NOT REFLECT ACTUAL LOCATION AND MAY NOT BE COMPLETE.

LEGEND

- BOUNDARY LINE OF PROPERTY
- SURVEY PIPE SET
- SURVEY PIPE FOUND
- CROSS CUT IN CONCRETE
- 675.2 EXISTING SPOT ELEVATION
- EXISTING VALVE
- FIRE HYDRANT
- EXISTING MANHOLE
- UTILITY POLE
- LIGHT STANDARD
- LIGHT W/JUNCTION BOX
- TELEPHONE PEDESTAL
- ELECTRIC TRANSFORMER
- INLET
- CURB INLET
- ST — STORM SEWER
- SAN — SANITARY SEWER
- W — WATERMAIN
- G — GASMAIN
- UE — UNDERGROUND ELECTRIC
- OE — OVERHEAD ELECTRIC
- UT — UNDERGROUND TELEPHONE
- UI — UNDERGROUND IRRIGATION
- CONCRETE SURFACE
- FENCE LINE
- TREE (P=PINE, C=CEDAR; MB=MULBERRY, O=OAK, H=HONEY LOCUST; M=MAPLE, B=BIRCH, WP=WHITE POPLAR)
- BUSH
- EXISTING CURB AND GUTTER

FW	FILTERED WATER
FF	FILTER FEED
MD	MAIN DRAIN
GD	GUTTER DRAIN
RC	RIDE CIRCULATION OR WATER FEATURE
BW	BACKWASH

REVISIONS

NO.	DATE
1	10/15/93

DATE 6/30/93

Markey and Associates, Inc.
Engineering Planning
4263 Edgewater Court, N.W.
Kennesaw, Georgia 30144
(404) 424-1506

LAKEVIEW POOL RENOVATION

POOL MECHANICAL PLAN

PEORIA PARK DISTRICT

DRAWN BY: RJJ
CHECKED BY: DNM
PROJECT NO.
SHEET PM1

THIS IS A CAD DRAWING, DO NOT CHANGE BY HAND